Oxford Cambridge and RSA

Wednesday 15 June 2022 – Afternoon

GCSE (9–1) Design and Technology

J310/01 Principles of Design and Technology

Time allowed: 2 hours

You must have:
- the Insert (inside this document)

You can use:
- a scientific calculator
- a ruler (cm/mm)
- geometrical instruments

Please write clearly in black ink. **Do not write in the barcodes.**

Centre number | | | | | | Candidate number | | | | |

First name(s) _____

Last name _____

INSTRUCTIONS
- Use black ink. You can use an HB pencil, but only for graphs and diagrams.
- Write your answer to each question in the space provided. If you need extra space use the lined pages at the end of this booklet. The question numbers must be clearly shown.
- Answer **all** the questions.
- Use the Insert to answer the questions in Section B.
- Where appropriate, your answer should be supported with working. Marks might be given for using a correct method, even if your answer is wrong.

INFORMATION
- The total mark for this paper is **100**.
- The marks for each question are shown in brackets **[ ]**.
- Quality of extended response will be assessed in questions marked with an asterisk (*).
- This document has **24** pages.

ADVICE
- Read each question carefully before you start your answer.

© OCR 2022 [603/0663/4]
DC (ST/FC) 310309/5
OCR is an exempt Charity

SECTION A

Answer **all** the questions.

1 **Fig. 1** shows images of an electric scooter.

Fig. 1

(a) The frame and deck of the scooter are made from an aluminium alloy.

(i) What is an alloy?

..... **[1]**

(ii) Give **two** reasons why aluminium alloy is a suitable material for the frame and deck of the scooter.

1 .....

.....

2 .....

.....

[2]

© OCR 2022

(b) The handlebars of the scooter are covered with a thermo polymer material.

Give **one** reason why this is a suitable material for the handlebar covering.

.....

..... **[1]**

(c) A designer will consider the primary user and wider stakeholders when designing a product.

Identify **two** wider stakeholders the designer of the scooter will need to consider.

1 .....

2 .....

[2]

(d) Identify **two** pieces of anthropometric data the designer would have used when designing the scooter **and** state how each would have been used.

1 .....

.....

.....

2 .....

.....

.....

[4]

(e) Explain **two** design features of the scooter that improve its usability.

1 .....

.....

2 .....

.....

[2]

© OCR 2022

(f) Electric scooter and bike hire schemes are increasingly popular in cities. The scooters and bikes can be hired using a smartphone app.

Explain **two** social and/or cultural impacts that the introduction of an electric scooter or bike hire scheme could have.

1 .....

.....

.....

.....

2 .....

.....

.....

.....

[4]

© OCR 2022

(g)* Discuss the impact on the environment of introducing electrically powered vehicles as methods of transport in city centres.

Your answer should consider life cycle assessment (LCA).

.....

.....

.....

.....

.....

.....

.....

.....

.....

.....

.....

.....

.....

.....

.....

.....

.....

.....

.....

..... **[8]**

© OCR 2022

2 **Fig. 2** shows a side table.

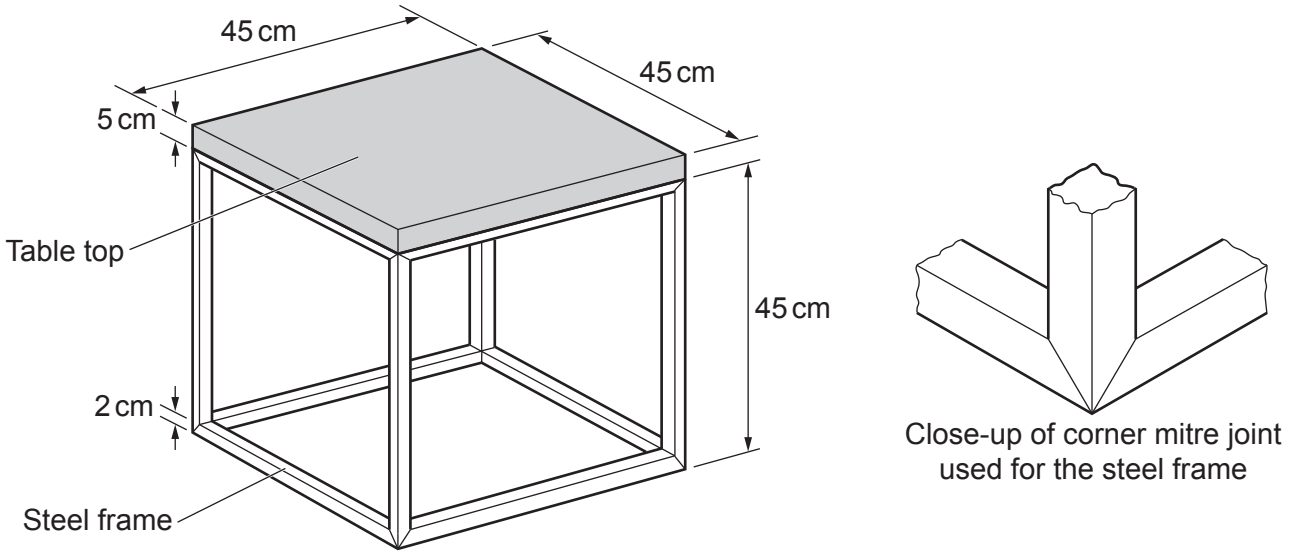

Fig. 2

(a) The frame of the side table is made from steel box section and constructed using a mitre joint at each corner.

(i) Calculate the length of steel box section needed to make **one** frame.

Length of steel ..... cm **[2]**

(ii) The steel box section is available in one metre lengths.

Calculate how many one metre lengths are needed to make **one** table.

Number of one metre lengths ..... **[2]**

© OCR 2022

(b) The table top is made from oak blocks glued together.

(i) Calculate the area of **one** table top.

State the unit for your answer.

Area of **one** table top ..... Unit ..... **[2]**

(ii) The oak blocks are 200 mm long and 50 mm wide.

Calculate the minimum number of oak blocks needed to make **one** table top.

Minimum number of oak blocks ..... **[2]**

(c) Oak is a hardwood.

Name **one** other hardwood the table top could be made from.

..... **[1]**

© OCR 2022

Fig. 2 is repeated below.

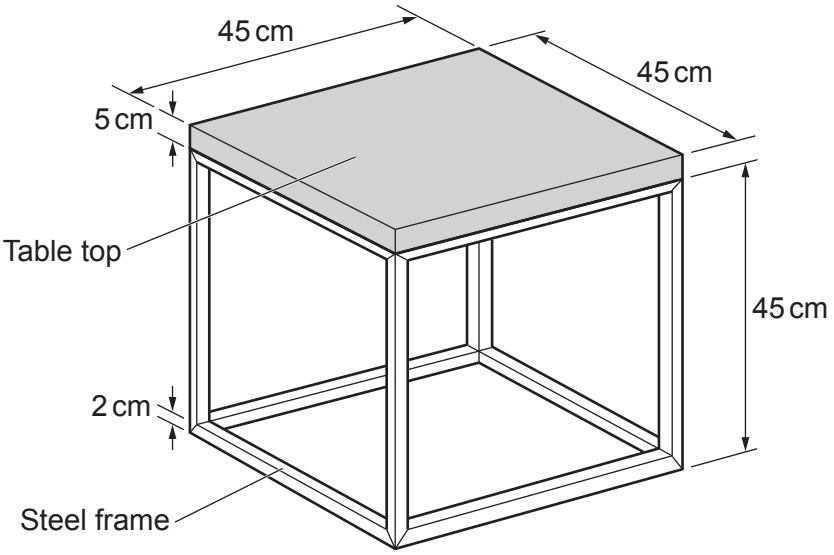

Fig. 2

(d) The side table shown in **Fig. 2** is packaged in a cardboard box.

(i) Calculate the minimum volume of the cardboard box needed to contain **one** side table.

State the unit for your answer.

Minimum volume ..... Unit ..... **[3]**

(ii) Give **one** reason why cardboard is a suitable material for this box.

.....

..... **[1]**

© OCR 2022

(e) Complete the working drawing to show the plan and side view of the side table shown in **Fig. 2**.

The front view has been done for you.

The grid points are 1 cm apart. Use the scale 1:10

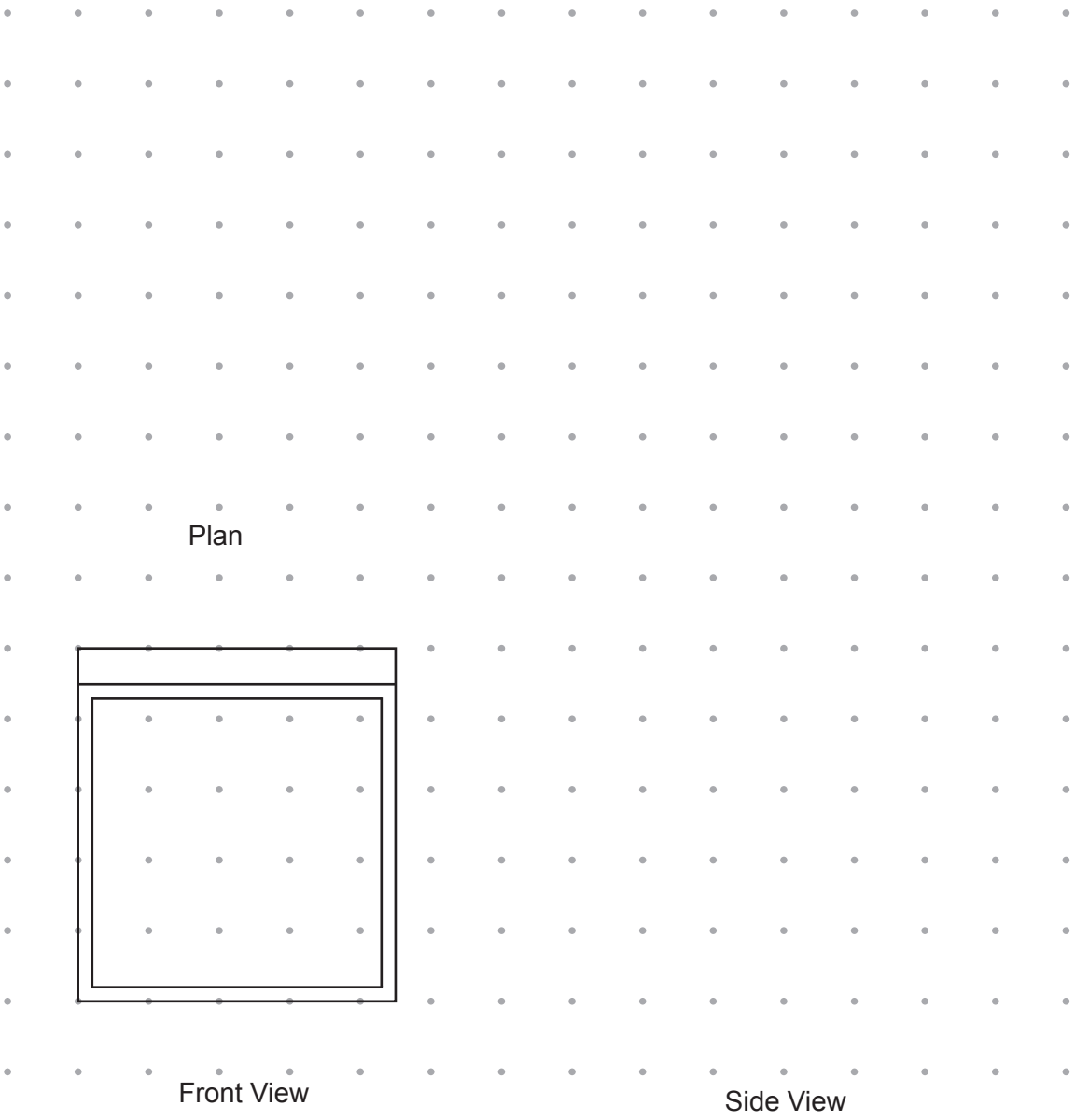

[4]

© OCR 2022

3 **Fig. 3** shows a wind-up bath toy.

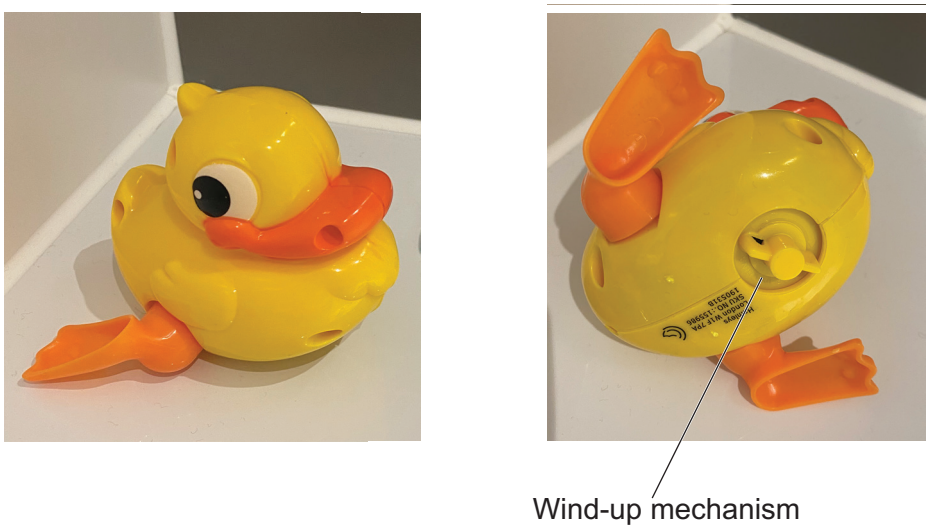

Fig. 3

(a) The wind-up bath toy uses a clockwork mechanism to create movement.

(i) In the table, identify the type of energy for the function described.

Function	**Type of energy**
The mechanism is wound up and stores energy.	
The mechanism is released and the toy moves.	

[2]

© OCR 2022

(ii) The wind-up bath toy uses different motions to move in the water.

The different motions are shown by the arrows on the diagrams below.

Label the diagrams to identify each type of motion.

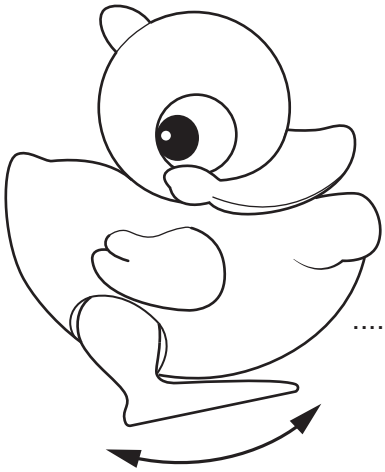

.....

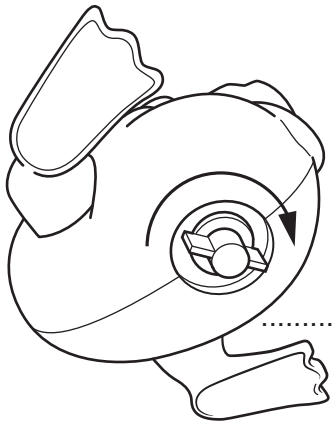

.....

.....

[3]

(b) **Fig. 4** shows the clockwork mechanism used in the wind-up bath toy.

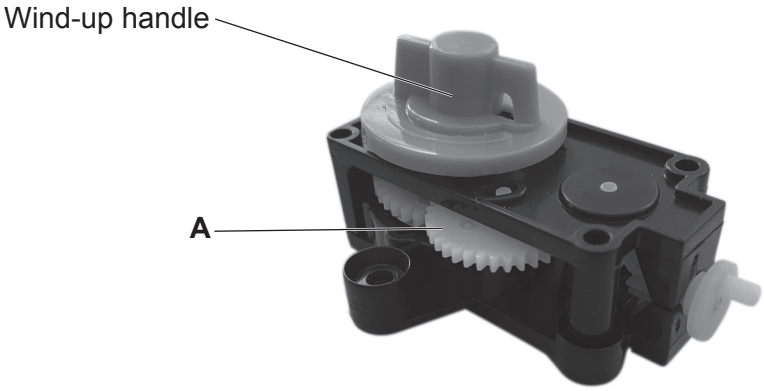

Fig. 4

Identify the mechanism labelled **A** in **Fig. 4** and describe how it works.

.....

..... **[2]**

© OCR 2022

(c) A cam and follower are part of the mechanism that moves the feet of the wind-up bath toy.

Describe how a cam and follower works.

You can use sketches and notes to support your answer.

.....

.....

.....

.....

[2]

(d) The designer of the wind-up bath toy wants to improve the toy's functionality and appeal.

Explain how **one** smart or modern material could be used by the designer to improve the toy.

.....

.....

.....

.....

.....

..... **[3]**

(e) Give **two** reasons a wind-up bath toy might be chosen over a battery-powered one.

1 .....

.....

2 .....

.....

[2]

© OCR 2022

BLANK PAGE

PLEASE DO NOT WRITE ON THIS PAGE

Turn over for the next question

© OCR 2022

SECTION B

Answer **all** the questions.

Use the **Insert** to answer the questions in this section.
The **Insert** has images and information about products used in a retail environment.

4 Refer to **page 8** of the Insert.

(a) **Image A** shows the uniform worn by staff at a fast-food restaurant.

The T-shirt and cap are made from cotton which is a natural fibre.

(i) Give **one** reason why cotton is a suitable material for the uniform.

..... **[1]**

(ii) Name **one** other natural fibre.

..... **[1]**

(b) Many online and in-store retailers are introducing initiatives to improve their sustainability or reduce their carbon footprint.

An example of this is a retailer using wool instead of polystyrene to insulate storage containers for frozen and chilled foods.

Give **two** other examples of how retailers can improve their sustainability or reduce their carbon footprint.

1 .....

.....

2 .....

.....
[2]

(c) High value items of clothing are often protected using security tags, as shown in **Image B**.

The security tag uses an electronic sensor.

Describe how a simple electronic sensor circuit works.

.....

.....

..... **[2]**

© OCR 2022

(d) **Image C** shows inside a modern retail store.

Explain why colour is an important consideration in retail design.

.....

.....

.....

.....

..... **[3]**

Turn over for the next question

© OCR 2022

BLANK PAGE

PLEASE DO NOT WRITE ON THIS PAGE

© OCR 2022

You need to answer question **5** about **one** of the products listed below covering an area you have studied in depth.

Information about the products is in the **Insert**.

Before you choose a product, read all parts of question **5**.

You **must** tick **one** box below to indicate your chosen product.

- ☐ **Product 1:** Egg box and sleeve – (papers and boards)
- ☐ **Product 2:** Hessian shopping bag – (fibres and fabrics)
- ☐ **Product 3:** Barcode scanner – (design engineering)
- ☐ **Product 4:** Display sign gripper – (polymers)
- ☐ **Product 5:** Shopping trolley – (metals)
- ☐ **Product 6:** Wooden crate – (timbers)

© OCR 2022

You should spend approximately 20 minutes on question **5 (a)**.

5 Study and use the images and information about your chosen product given in the **Insert**.

(a) Show the step-by-step stages that have been used to **commercially manufacture** your chosen product. These stages may include marking out, wasting, forming, assembly and finish.

You must include details of:

- specific materials, tools and components that would be used during commercial manufacturing
- the processes, techniques or skills that would be used
- any digital technology used as appropriate
- features of any jigs, formers, moulds or templates and how they are used.

You can use sketches and notes to support your answer. **[12]**

© OCR 2022

© OCR 2022

(b) Explain **two** reasons why jigs, formers, moulds, templates and/or digital technology would be used during the manufacturing process of your chosen product.

1 .....

.....

.....

2 .....

.....

.....
[4]

(c) Explain how the form, structure or components in your chosen product help it achieve its functionality.

.....

.....

..... **[2]**

© OCR 2022

(d) Explain how **one** of the materials/components used in your chosen product is sourced and converted into a usable form for manufacturing.

Material/component: .....

.....

.....

.....

.....

.....

.....

.....

.....

.....

.....

.....

.....

.....

.....

.....

.....

.....

..... **[6]**

© OCR 2022

6 **(a)** Branding is important in a retail environment.

Explain **two** reasons why companies choose to brand products.

1 .....

.....

.....

.....

2 .....

.....

.....

.....

[4]

(b)* New and emerging technologies are being used in shops, retail outlets and online shopping.

Discuss the effect of new and emerging technologies on a customer's shopping experience.

Use examples to support your answer. **[8]**

.....

.....

.....

.....

.....

.....

.....

.....

.....

.....

.....

.....

.....

© OCR 2022

.....

.....

.....

.....

.....

.....

.....

.....

.....

.....

.....

.....

.....

.....

END OF QUESTION PAPER

© OCR 2022

ADDITIONAL ANSWER SPACE

If additional space is required, you should use the following lined page(s). The question number(s) must be clearly shown in the margin(s).

OCR
Oxford Cambridge and RSA

Copyright Information

OCR is committed to seeking permission to reproduce all third-party content that it uses in its assessment materials. OCR has attempted to identify and contact all copyright holders whose work is used in this paper. To avoid the issue of disclosure of answer-related information to candidates, all copyright acknowledgements are reproduced in the OCR Copyright Acknowledgements Booklet. This is produced for each series of examinations and is freely available to download from our public website (www.ocr.org.uk) after the live examination series.

If OCR has unwittingly failed to correctly acknowledge or clear any third-party content in this assessment material, OCR will be happy to correct its mistake at the earliest possible opportunity.

For queries or further information please contact The OCR Copyright Team, The Triangle Building, Shaftesbury Road, Cambridge CB2 8EA.

OCR is part of Cambridge University Press & Assessment, which is itself a department of the University of Cambridge.

© OCR 2022